PFISTER

Pfirst Series™

Single Control Lavatory Faucet

LJ142-800C Finish*(C)* ❑
LJ142-800K Finish*(K)* ❑

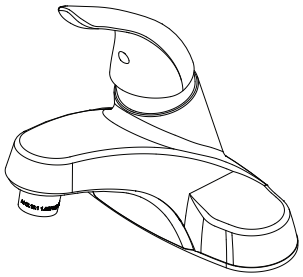

- Single Handle
- 3-Hole Installation
- Stainless Steel Ball Valve

Specifications

Features

- Job Pack Contains 12 Lavatory Faucets
- 1.2 GPM Flow Rate
- PVD Finish (K Finish Only)
- Fixed Body
- Mounting Hardware Included
- Push and Seal™ Pop-Up
- Stainless Steel Ball Valve
- 10 Year Commercial Warranty

Code Compliance

Pfister products are designed and manufactured in compliance with the following standards and codes:

- IAPMO Certified to ASME A112.18.1/CSA B125.1
- EPA WaterSense Certified
- NSF/ANSI/CAN61:Q≤1
- CEC Certified/CALGreen compliant
- ADA Compliant – ANSI A117.1 (Lever Handle Only)

Dimensions

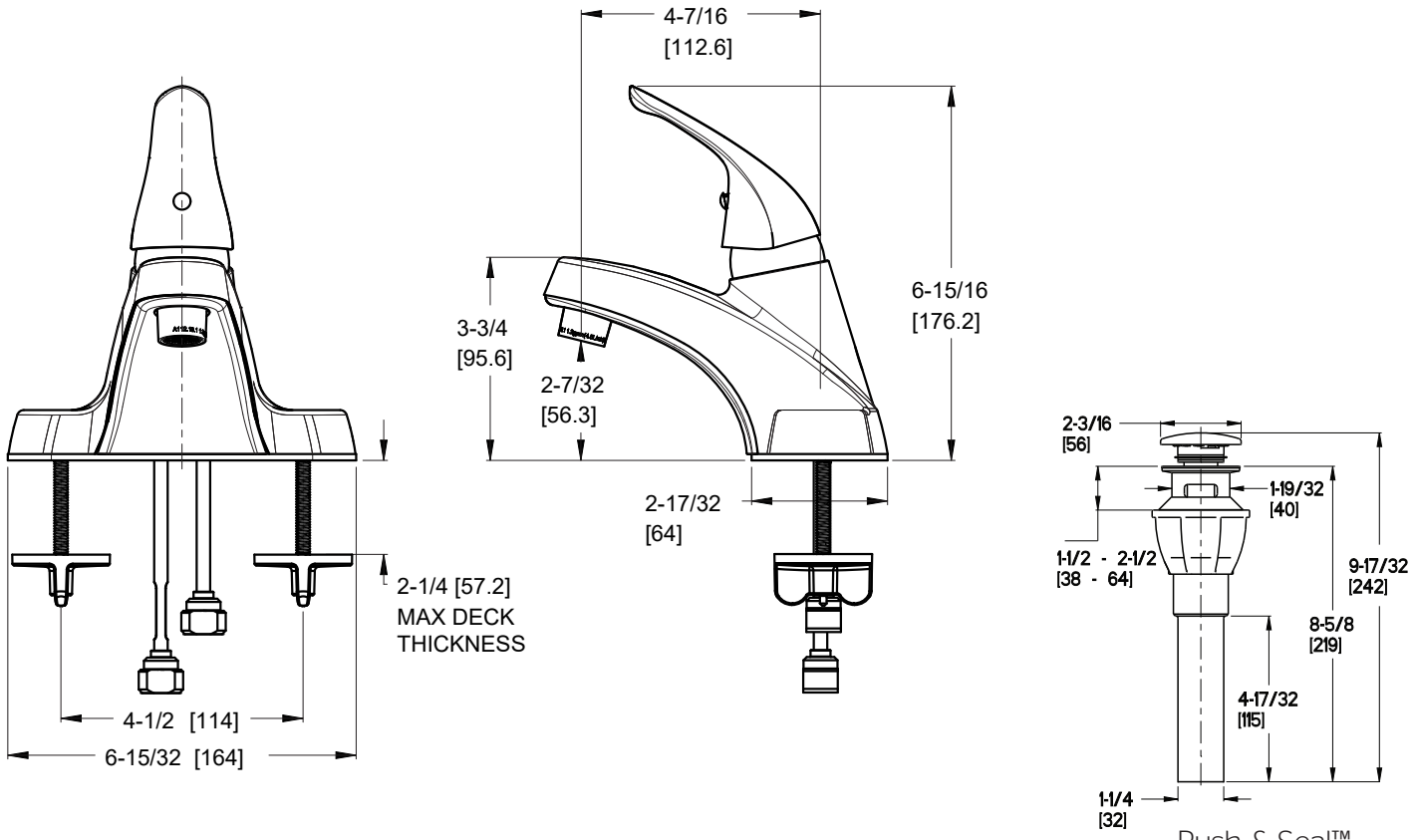

Ø1 Min to Ø1-1/2 Max. Deck Hole Openings

Push & Seal™

Copyright © 2022, Pfister Inc.